FinanceAsia

Print Close

Offshore RMB — a one-way bet

By Linklaters | 19 May 2011

The offshore renminbi market has reached an inflection point, with Hong Kong poised to become a globally important settlement centre. Linklaters explores the developments so far and the challenges ahead.

In a piece last October, we mused under the title *World Denomination* on the potential for rapid growth of the offshore renminbi. Parallels with the development of the eurodollar market are illuminating but possibly misleading, because the purpose and direction of the offshore currencies are so different. Six months on, what more can we learn about this fast-developing market?

A currency for international trade

It is worth emphasising that offshore renminbi is not a local currency experiment confined to Hong Kong. The regulatory changes in the PRC that have led to the continuing rapid growth of an offshore pool of renminbi are designed to increase the use of renminbi for the settlement of international trade. A limited trade settlement pilot scheme established in June 2009 was radically expanded in June 2010. The pilot scheme allowed two-way settlement of exports and imports in renminbi between participating enterprises in five Chinese cities and their trading counterparts in Hong Kong, Macau and the ten nations of Asean. Under the expanded scheme, participating enterprises in 20 Chinese provinces and cities, covering most of the country, trade in renminbi with trading partners worldwide.

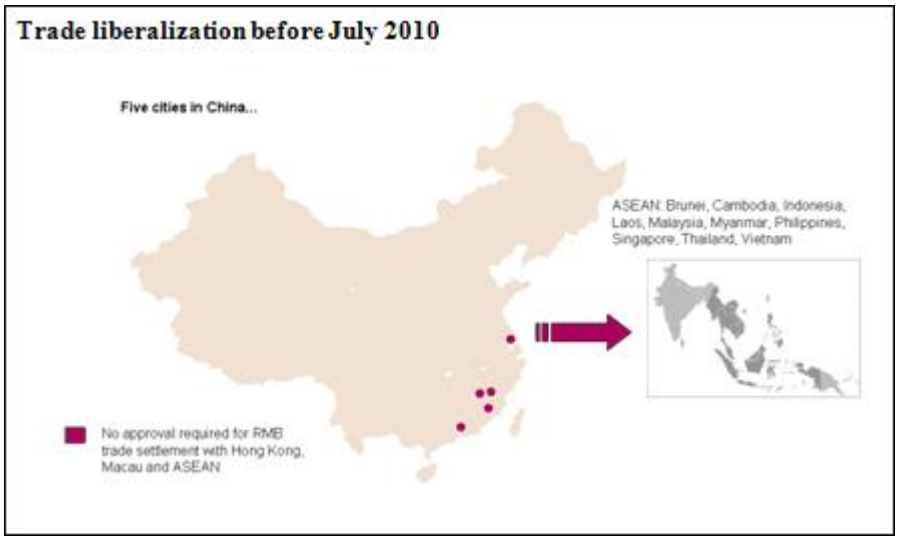

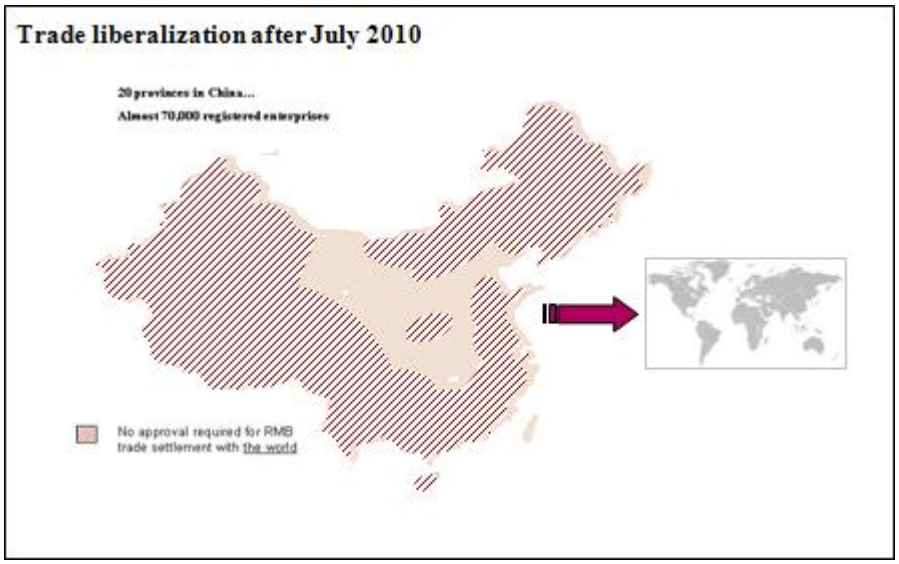

The advantages for China are clear: increasing use of its own currency for trade reduces transaction costs and foreign exchange risk for Chinese enterprises. More importantly, in the bigger scheme it reduces the inflow of US dollars into China, which has contributed to currency appreciation pressures, domestic inflation and bloated US dollar foreign exchange reserves.

Driven primarily by these trade flows, the offshore pool of renminbi is growing very rapidly. In the period following the introduction of the pilot scheme, renminbi deposits in Hong Kong grew to around Rmb90 billion at the end of June 2010; at the end of March 2011, statistics published by the Hong Kong Monetary Authority (HKMA) show that renminbi deposits in Hong Kong have reached Rmb451 billion ($70 billion). At this rate of growth, predictions that the offshore pool in Hong Kong will be measured in trillions of renminbi within five years begin to look rather conservative.

In the first quarter of 2011, it is reported that some 7% of China's imports and exports were settled in renminbi, up from 0.5% in the first quarter of 2010. Analysts in Hong Kong project that up to half of China's international trade could be settled in renminbi within three to five years, postulating some $2 trillion-worth of cash flows annually.

The purpose of this quick round up of factoids and crystal ball-gazing is to justify three contentions.

Offshore renminbi is here to stay: though often referred to an experiment conducted in China's convenient offshore financial laboratory of Hong Kong, the political and economic stakes are too high for the experiment to fail or to be reversed.

The offshore pool must be available worldwide: Hong Kong is an important entrepot still in the world's trade with China, but it is clear that renminbi must be available to companies around the world — in the US and Europe, but also in the emerging markets of Asia, South America and Africa, which account for a large slice of China's trade.

An international capital market will be needed to support the new trade settlement currency, and that capital market needs a single international financial centre.

Let's look now at some implications of these contentions.

Here today…gone tomorrow?

We'll leave to the economists the discussion of whether — or more likely when — the renminbi will take its place alongside the US dollar and the euro as a major currency for world trade, and ultimately a reserve currency. More prosaic concerns about the size and liquidity of the offshore pool are being tackled in the meantime.

The relatively small size of some of the early bond issues in offshore renminbi led to concerns about liquidity and the extent of the potential investor base. More recent issues have allayed these concerns — the PRC Ministry of Finance raised Rmb8 billion in bonds in December 2010; corporate issues of Rmb2 billion to Rmb3 billion are becoming commonplace.

The dependence of "dim sum" bonds on clearance through the Central Moneymarkets Unit (CMU), the domestic Hong Kong bond clearance system, also gave the developing market a parochial feel. A number of renminbi eurobonds — that is securities distributed internationally and both denominated and payable in offshore renminbi — have now however been closed through Euroclear and Clearstream in standard syndicated closings. Some large renminbi investors may still prefer to hold in CMU, but the practicality of a standard eurobond closing has certainly now been demonstrated, including the availability of the offshore renminbi credit lines that the clearing systems need to lubricate a syndicated delivery versus payment settlement.

Many issuers of offshore renminbi bonds use the proceeds for investment in China (for which PRC approvals are still needed under continuing capital controls), in circumstances which provide some assurance that repatriation of the investment is available to finance the repayment of the bonds. As the market continues grow, issuers have become more concerned about what might happen if the availability of the offshore renminbi is jeopardised for any reason. Currency fallback clauses are now gaining acceptance to deal with this question: issuers benefit from a clause which allows them to avoid a technical default by paying back in US dollars; investors also have the reassurance that they will be repaid in a freely convertible currency if the offshore pool (against all expectation) does dry up. While there is still debate and negotiation around the form of these clauses, worries felt in the early days that fallbacks may be frowned on by PRC and Hong Kong regulators, or may spook investors, have receded and this surely reflects a mature assessment of the risks.

That the offshore pool is still in its early days of development is however shown by the absence of some key benchmarks that will certainly be required for the future development of the offshore currency. Two basic examples will suffice. Offshore foreign exchange spot rates are available — and quoted on-screen — for renminbi against US dollars on a deliverable basis, but the underlying market is said to remain relatively thin. Deliverable spot rates against other currencies are harder to find. It is also notable that while the offshore renminbi eurobond market has taken off, offshore renminbi-denominated loans have yet to develop any critical mass. One impediment is certainly the absence of a reliable interest rate benchmark — a renminbi HIBOR, for example — on the basis of which banks can fund. It is, however, still early days and as the pool continues to grow, and as trade settlement in renminbi increases, the development of sufficient liquidity to support reliable foreign exchange and interest rate benchmarks is to be expected.

World denomination — the global pool of offshore renminbi

It is a given that if the renminbi is to be meaningfully internationalised, and is to be used for the settlement of imports and exports of goods and services between China and the rest of the world, then it must be available internationally too. And this means, in practical terms, that it must be available as bank money in bank accounts across the globe.

The offshore pool came into existence in the form of, and it is still largely defined by reference to, renminbi bank deposits in Hong Kong. We have described elsewhere the mechanism by which the offshore pool is linked to the domestic money supply through the “clearing agreement” between People’s Bank of China (PBoC, the central bank) and Bank of China, Hong Kong (BoC HK, a major Chinese commercial bank). The clearing agreement both regulates the cross-border flow of renminbi into and out of the offshore pool for permitted trade settlement purposes, and validates the money in the offshore pool as “real” renminbi by ensuring it is ultimately supported, as in other fiat currencies, by a claim on the central bank.

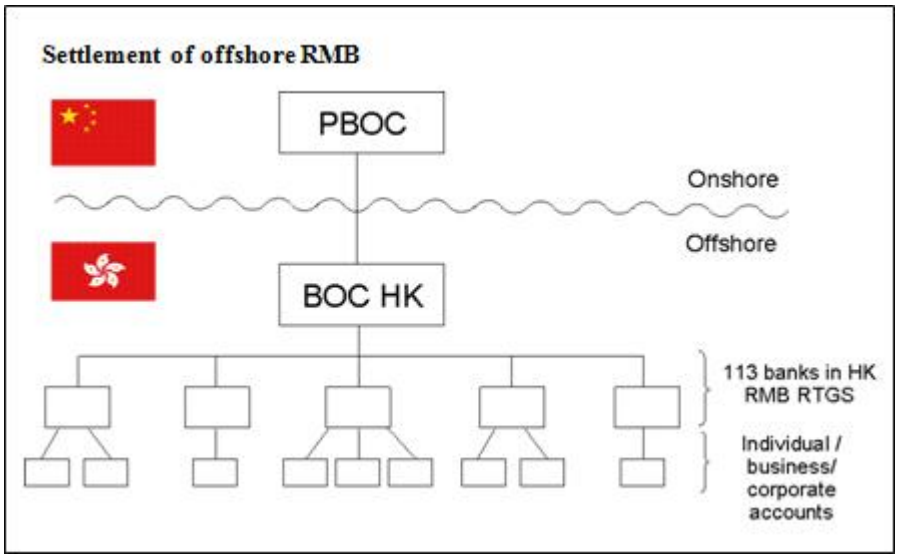

An important feature of this set-up is that it is — in principle at least — scalable. Hong Kong has a key position in the internationalisation of the renminbi for a number reasons, but two pieces of infrastructure matter here. The first is the clearing agreement already mentioned. Macau also has one but lacks the international financial clout of Hong Kong; there are reports in the media that Singapore may soon also be granted this favour (on which more later). The second important bit of kit is Hong Kong’s renminbi real time gross settlement system (RTGS), which links seamlessly (as the official description has it) with the PRC’s domestic electronic interbank settlement system, known as CNAPS. This means that trade settlement transactions can be processed right through in renminbi across the border. It also means that participant banks in renminbi RTGS can settle renminbi between themselves offshore, with no need for any onshore settlement.

Hong Kong emerges in pole position to be the global settlement centre for the internationalised currency. Access to renminbi RTGS is available, in principle, worldwide. It is possible for banks outside Hong Kong to become direct participants in renminbi RTGS. It is also perfectly possible for banks around the world to establish correspondent banking relationships with banks in Hong Kong which participate in RTGS. This process seems indeed to be well underway. The map below is a quick-and-dirty compilation of the host countries of banks which appear on the list of participants in RTGS — the extent of correspondent banking arrangements must be much more widespread, but it gives some indication of the worldwide reach of the offshore pool already.

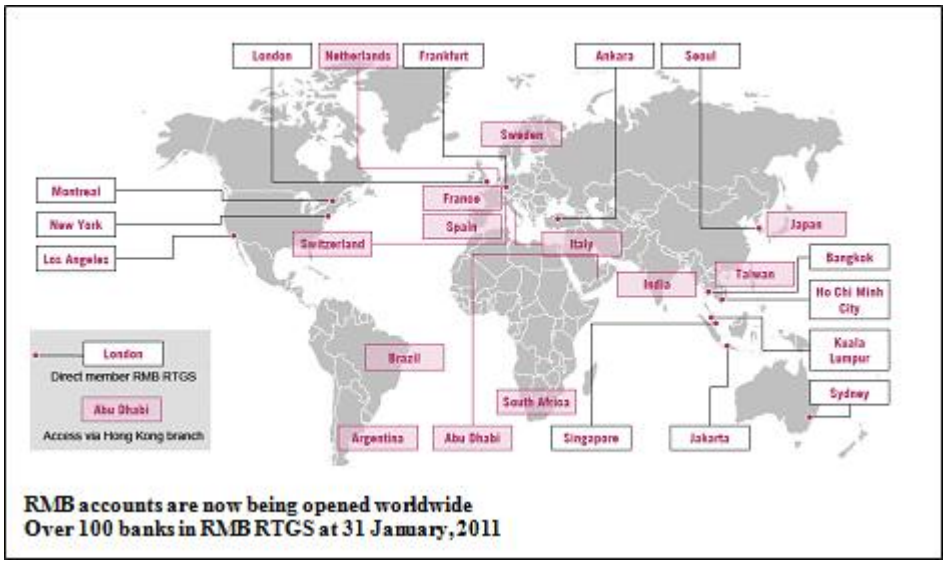

But there is a snag. Under the clearing agreement as originally conceived, all the renminbi in the offshore pool is cleared and settled through BoC HK. As the pool continued to swell in the second half of last year, a number of banks in Hong Kong became increasingly concerned about credit and concentration risk relating to their deposits with BoC HK — the offshore pool was constructed to make this risk accumulation unavoidable. It was becoming clear that this bottleneck could actually threaten the in-principle worldwide scalability of the offshore pool.

The authorities have responded quickly and decisively to resolve this growing problem, although a note of criticism must also be sounded.

The resolution, which we understand is already available for implementation, involves providing for a fiduciary account to be made available to participating banks alongside their settlement account with BoC HK. Any cash not needed for transactional settlement purposes can be swept into the fiduciary account; when the money is needed again, it can be transferred back into the settlement account for use. The fiduciary account, as its name suggests, is designed to be a form of trust account. All the funds credited to the fiduciary account are then required, automatically, to be deposited by BoC HK directly with PBoC. Our understanding is that this deposit is made to an omnibus segregated client account with PBoC on behalf of the participating banks.

This solution is elegant and simple: it transfers the credit exposure of participating banks (apart from cash on the settlement account) from BoC HK to PBoC — the issuing bank of the currency of the account and therefore presumably the best possible credit for the currency (albeit in the less than totally reassuring sense that it can always print as much as it needs to pay back the deposits). And it achieves this fix while leaving untouched the important feature of the settlement accounts with BoC HK that they remain offshore to implement a true offshore pool, transactions in which can be settled entirely offshore.

Now the sour note. The outline of the solution is reasonably clear, but it seems the documentation has not been published and, like the clearing agreement itself, is subject to confidentiality clauses. Unlike the clearing agreement, however (which we understand is largely mechanical in content), the fiduciary account and PBoC account documentation must do heavy-duty legal work in order to serve their purpose. For example, participating banks will wish to be sure that the Hong Kong fiduciary account with BoC HK is sufficiently robust to ensure that in a liquidation of BoC HK sums credited to the fiduciary account will not fall into the liquidation estate available to the general creditors of the bank. This would be a matter of Hong Kong insolvency law. Next, and assuming the renminbi deposits are safe from the liquidators' famously tenacious

grasp, what is the nature of participating banks' claims against PBoC? Could the claim be asserted directly or only through the liquidator? Could it be subject to set off or other consequences of the relationship between BoC HK and PBoC? These are matters primarily of PRC law.

On a matter of this importance, participating banks might reasonably expect both that legal opinions on the Hong Kong and PRC law validity of the arrangements would be available as part of the documentation package; and that the documentation would be publicly available for independent review.

The international capital market in offshore renminbi

The fiduciary account structure is clearly intended to fix the scalability of the offshore renminbi pool in Hong Kong, and despite the present obscurity of the arrangements there is no reason to suppose it will not do so. This should confirm Hong Kong's status as the de facto global settlement centre for offshore renminbi. Hong Kong is currently the centre for accumulating offshore renminbi deposits, the centre for investor demand for dim sum bond issues, the place where the bonds are primarily still cleared in CMU. But of much greater significance for the future would be Hong Kong's role as a settlement centre.

Bond and derivatives documentation already usually operates to make Hong Kong the contractually agreed principal financial centre for offshore renminbi. Payments in offshore renminbi are required to be made to a bank account maintained by the payee in Hong Kong in just the same way that the standard formulation for a US dollar payment is by transfer to an account in New York, for a sterling payment to an account in London, and so on. This works to ensure the offshore nature of the renminbi being transferred. And it is in the interests of both the payer and the payee to make the stipulation. If a payee stipulates an account in Beijing, an offshore issuer may well not be able to make the payment because of capital and other foreign exchange controls. If a payer were free to tender payment in Beijing, the real principal financial centre for renminbi, a payee may find itself unable even to open an account to receive the payment.

The fact the settlement centre is offshore the mainland PRC is also interesting and significant. Hong Kong, under the one country, two systems doctrine is uniquely placed to stand outside the foreign exchange control regime of the PRC, while remaining part of sovereign China, an important consideration for the offshoring of a currency. Attempts to internationalise currencies from an onshore base — such as Japan with the yen — require cumbersome and inconvenient regulations to keep apart the offshore and the onshore accounts.

The establishment of an offshore settlement centre will be important for the orderly development of a unified international capital market in renminbi. As companies become more used to settling transactions in renminbi, and volumes grow, demand for the accompanying suite of forex, hedging and financing tools is to be expected. The need for further development of benchmarks has been noted, and a single market with common conventions and benchmarks would both accelerate the process and make it more efficient.

The recent media reports that Singapore may soon be promoted as an offshore hub for renminbi trading complicate this picture rather. It is not entirely clear as yet how renminbi trading would be introduced into Singapore, and much depends on how it is arranged.

The term CNH — CNY deliverable in Hong Kong — has always raised questions about whether this represents an inappropriate land grab by Hong Kong. What about CNS — CNY deliverable in Singapore, for example? There is of course even now no reason why Singapore banks should not participate in Hong Kong's RTGS, and many do. To this extent, settling renminbi trades in Singapore (or anywhere else) is uncontroversial and would be part of a global settlement system based on Hong Kong.

If Singapore, or another jurisdiction, benefits from a clearing agreement with PBoC like Hong Kong, the question arises as to how this second pool would interact with the offshore pool in Hong Kong. In particular, how could transfers be made from one pool to another? More specifically could “CNH” be transferred to become “CNS” and vice versa?

Until the arrangements for a Singapore offshore pool are published, it is rather fruitless to speculate. However, on basic principles, one would look for accounts held at a single institution by beneficiaries in the Hong Kong and the Singapore pools in order for a transfer to bridge the pools. If a simple clearing agreement arrangement is reproduced, it would seem that the only candidate for that institution is People’s Bank of China itself.

It is at any rate premature to consider changing the contractual payment provisions already described. We know how the offshore renminbi settlement in Hong Kong currently works. It would be risky for a payer to permit a payee to elect transfer to an account outside Hong Kong at present. If the account is actually part of the Hong Kong offshore pool, the result is only that the payer effectively assumes responsibility for the performance of the payee’s correspondent bank, if any (though why should it do that?). But if the account is part of a separate offshore pool, there would be the risk that the transfer may be difficult or impossible to make from outside the pool. The same point applies in reverse if a payee were to permit a payer to make tender in its choice of jurisdiction outside the PRC. And if separate pools are joined only at the level of PBoC, then the transfer may actually have to take place inside the PRC.

While the offshore pool continues to grow, we find ourselves at an interesting inflection point for the structure of the offshore renminbi capital market.

Print Close